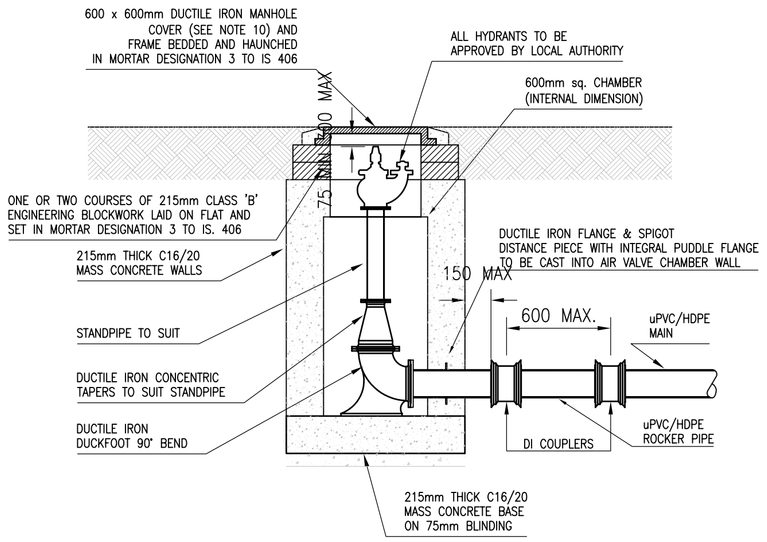

END OF LINE HYDRANT

SCALE 1:25

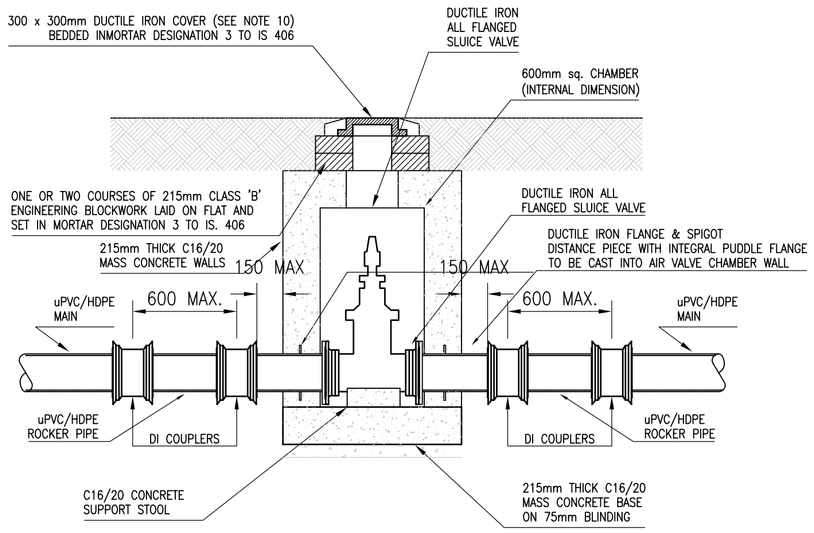

SLUICE VALVE CHAMBER

SCALE 1:25

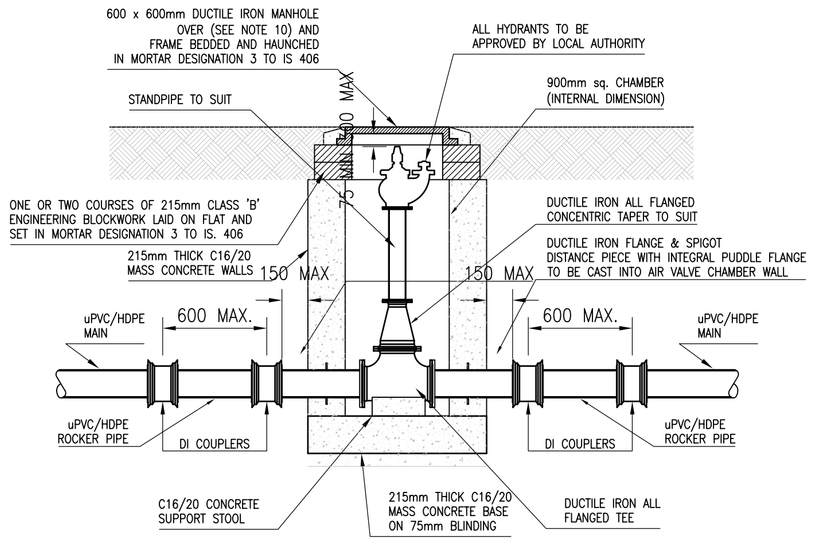

IN-LINE HYDRANT CHAMBER

SCALE 1:25

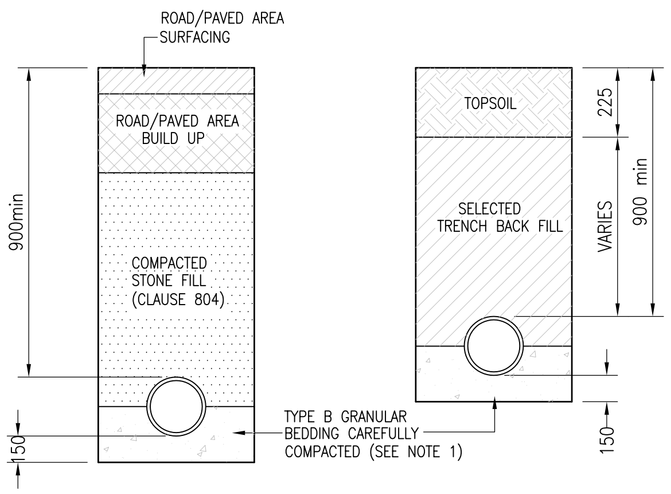

GRANULAR BEDDING
FOR FLEXIBLE PIPES LAID ALONG ROADS & PAVED AREAS

GRANULAR BEDDING
FOR FLEXIBLE PIPES LAID THROUGH GRASSED AREAS

NOTES:

1. GRANULAR BEDDING TYPE B : SHALL CONSIST OF GRAVEL GRADED FROM 9.5mm TO 4.75mm, OTHER GRANULAR MATERIALS MAYBE USE SUBJECT TO APPROVAL.
2. ALL PIPES PASSING UNDER FOUNDATIONS & FLOORS SHALL BE HAUNCHED.

WATERMAIN BEDDING DETAILS

NOT TO SCALE

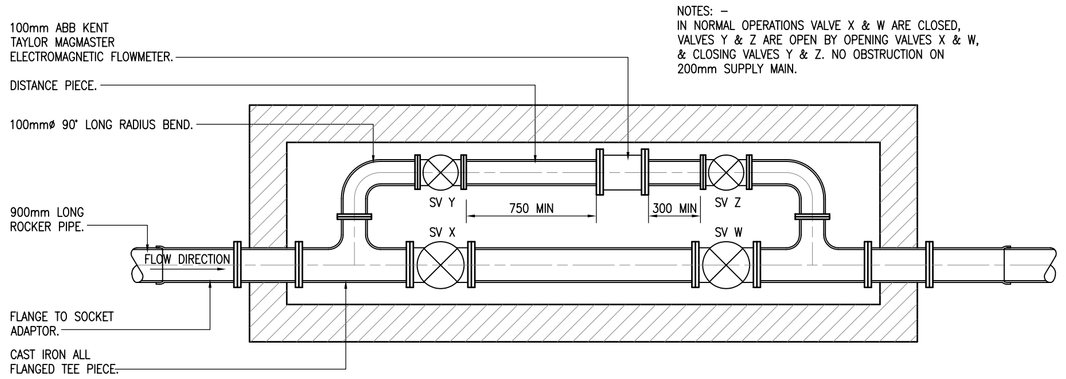

PLAN OF WATER METER CHAMBER

NOT TO SCALE

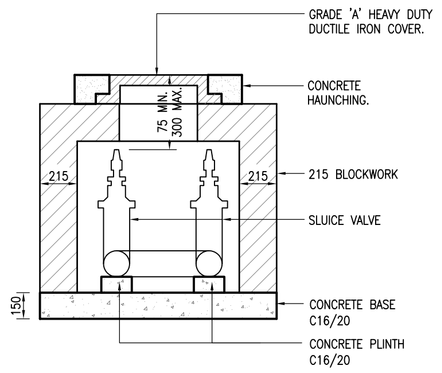

SECTION THROUGH WATER METER CHAMBER

NOT TO SCALE

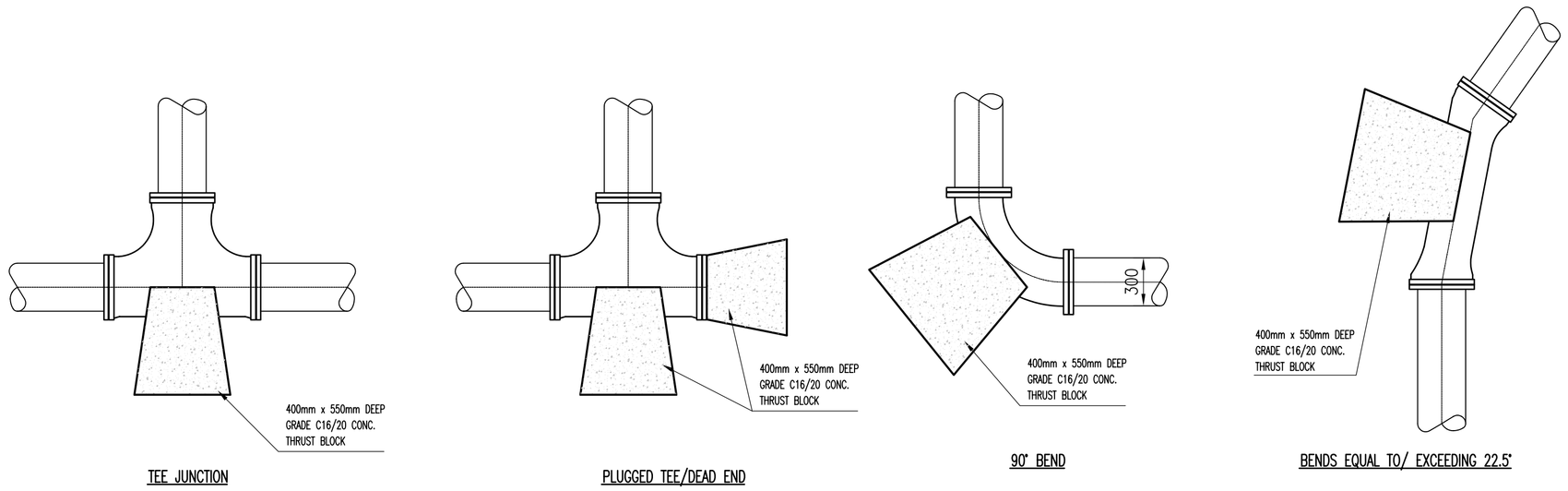

TYPICAL THRUST BLOCK DETAILS FOR MAINS OF LESS THAN 300mmø

NOT TO SCALE

©Punch Consulting Engineers
This drawing and any design hereon is the copyright of the Consultants and must not be reproduced without their written consent.
All drawings remain the property of the Consultants.
Figured dimension only to be taken from this drawing.
Consultants to be informed immediately of any discrepancies before work proceeds.

Rev.	Amendment	By	Date	Rev.	Amendment	By	Date
PL0	ISSUED FOR PLANNING	JR	06-03-2013				

Client: KILKENNY COUNTY COUNCIL

Job: KILKENNY CITY & COUNTY LIBRARY

Title: STANDARD DETAILS SHEET 2

Tech. Check:
Eng. Check:
Approved:

PUNCH consulting engineers
Dublin
Limerick
Cork
Carnegie House, Library Road, Dun Laoghaire, Co. Dublin, Ireland
t:+353 1 271 2200 f:+353 1 271 220 e: dublin@punchconsulting.com
97 Henry Street, Limerick, Ireland
t:+353 61 221 200 f:+353 61 221 201 e: limerick@punchconsulting.com
Copley Hall, Cotters Street, Cork, Ireland
t:+353 21 462 4000 f:+353 21 462 4001 e: cork@punchconsulting.com
w: www.punchconsulting.com

Stage:	PLANNING
Scale @ A1:	AS SHOWN
Drawn:	J.Rushe
Date:	MARCH 2012
Drawing No:	112255-006
Rev:	PL0